SSC2803A

High-voltage High-current Darlington transistor Arrays

➢ Features

- 500mA Rated Collector Current (Single Output).
- High Voltage Outputs: 50V.
- Inputs Compatible With Various Types of Logic
- Output Clamp Diodes

➢ Description

The SSC2803A device is a 50 V, 500 mA Darlington transistor array. The device consists of eight NPN Darlington pairs that feature high-voltage outputs with common-cathode clamp diodes for switching inductive loads. The collector-current rating of each Darlington pair is 500 mA. The Darlington pairs may be connected in parallel for higher current capability.

Applications include relay drivers, hammer drivers, lamp drivers, display drivers (LED and gas discharge), line drivers, and logic buffers. The SSC2803A device has a 2.7-kΩ series base resistor for each Darlington pair for operation directly with TTL or 5-V CMOS devices.

➢ Applications

- IP Camera
- Stepper Motors
- HVAC Valve and LED Dot Matrix

➢ Ordering Information

Device	Package	Shipping
SSC2803A	SOP18	40/Tube

➢ Pin configuration

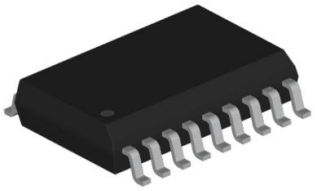

Top view

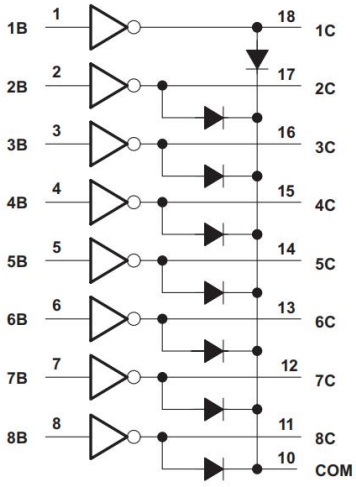

Logic Diagram

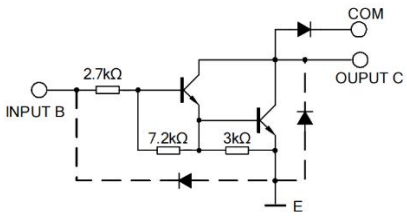

Note: The input and output parasitic diodes cannot be used as clamp diodes.

➢ Typical application

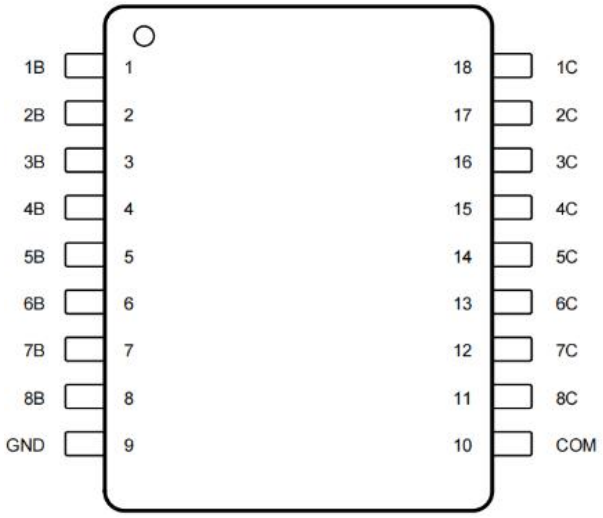

SOP18

➢ Pin Descriptions

SOP18		TYPE	Function
Pin NO.	Pin Name		
1	1B	I	Channel 1 through 8 Darlington base input
2	2B		
3	3B		
4	4B		
5	5B		
6	6B		
7	7B		
8	8B		
9	GND	-	Common emitter shared by all channels (typically tied to ground)
10	COM	I/O	Common cathode node for flyback diodes (required for inductive loads)
11	8C	O	Channel 1 through 8 Darlington collector output
12	7C		
13	6C		
14	5C		
15	4C		
16	3C		
17	2C		
18	1C		

➢ Marking Information

Marking	Designator	Description
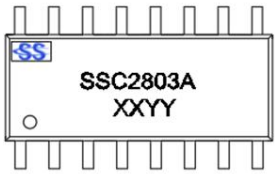	SSC	Logo
	2803A	Product model
	XXYY	XX: year:23 Y: week:01~52 Y: Lot

➢ Absolute Maximum Ratings(T_A=25℃ unless otherwise noted)

Symbol	Parameter	Ratings	Unit
V_{CE}	Collector to emitter Voltage	50	V
V_{IN}	Input voltage	30	V
I_C	Collector current (continuous current)	500	mA
I_B	Base current (continuous current)	25	mA
P_D	Maximum power dissipation	Internally Limited(3)	W
T_A	Operating Ambient temperature	-20 to 80	°C
T_J	Operation junction temperature	125	℃
T_{STG}	Storage temperature range	-55 to 150	℃

(1) Stresses beyond those listed under Absolute Maximum Ratings may cause permanent damage to the device. These are stress ratings only, which do not imply functional operation of the device at these or any other conditions beyond those indicated under Recommended Operating Conditions. Exposure to absolute-maximum rated conditions for extended periods may affect device reliability.

(2) All voltages are with respect to network ground terminal.

(3) Refer to Thermal Information for details.

➢ Thermal Information

Symbol	Parameter	Ratings	Unit
$R_{\theta JA}$	Junction-to-ambient thermal resistance	70.4	°C/W
P_D	Reference maximum power dissipation for continuous operation	1.42	W

➢ Electronics Characteristics(T_A=25℃ unless otherwise noted)

Symbol	Parameter	Test Conditions	Min	Typ.	Max	Unit
$V_{I(ON)}$	On State Input Voltage	V_{CE} = 2V,I_C= 200mA			2.4	V
		V_{CE} = 2V,I_C= 250mA			2.7	
		V_{CE} = 2V,I_C= 300mA			3	
$V_{CE\ (SAT)}$	Collector Emitter Saturation Voltage	I_C= 350mA , I_B=500μA		1.5	1.7	V
		I_C= 200mA , I_B=350μA		1.15	1.3	V
		I_C= 100mA , I_B=250μA		0.85	1.35	V
I_{CEX}	Collector cutoff current	V_{CE} = 50V , T_A = +25℃			50	uA
		V_{CE} =50V,T_A = +85℃			100	
$I_{I(OFF)}$	Off State Input Current	V_{CE}=50V, I_C= 500uA	50	100		uA
V_F	Clamp forward voltage	I_F =350mA		1.5	2	V
I_I	Input current	VI = 3.85 V		1.15	1.35	mA
I_R	Clamp Reverse Current	V_R=50 V, T_A = +25℃			50	uA
		V_R=50 V, T_A = +85℃			100	
C_J	Input Capacitance	V_I=0V, f = 1MHZ		15	30	pF
t_{ON}	Turn-on delay time (50% EI to 50% EO)	50%E_I to 50%Eo		0.25	1	us
t_{OFF}	Turn-off delay time (50% EI to 50% EO)	50%E_I to 50%Eo		0.25	1	us

➢ Typical Application

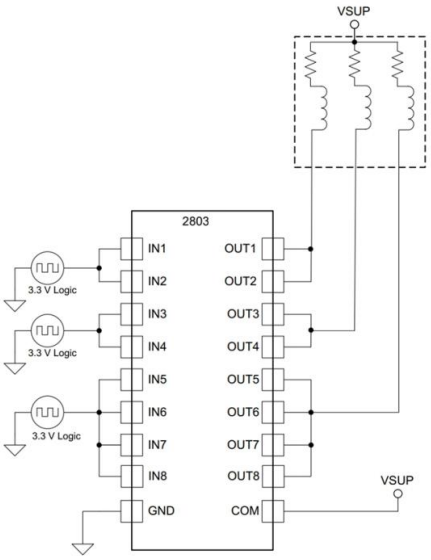

➢ Typical Characteristics(T_A=25℃ unless otherwise noted)

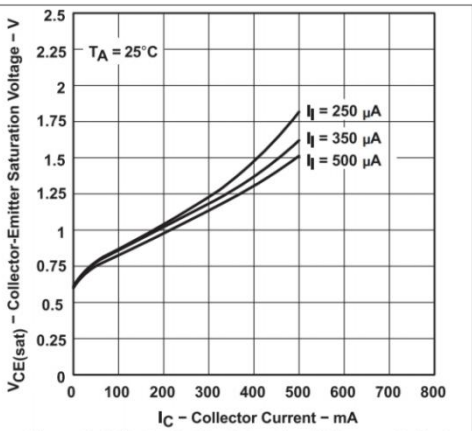

Figure 1. Collector-Emitter Saturation Voltage vs Collector Current (One Darlington)

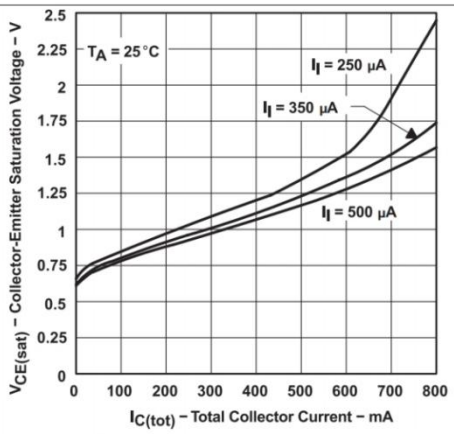

Figure 2. Collector-Emitter Saturation Voltage vs Total Collector Current (Two Darlingtons in Parallel)

➢ Package Information

Package Type: SOP18

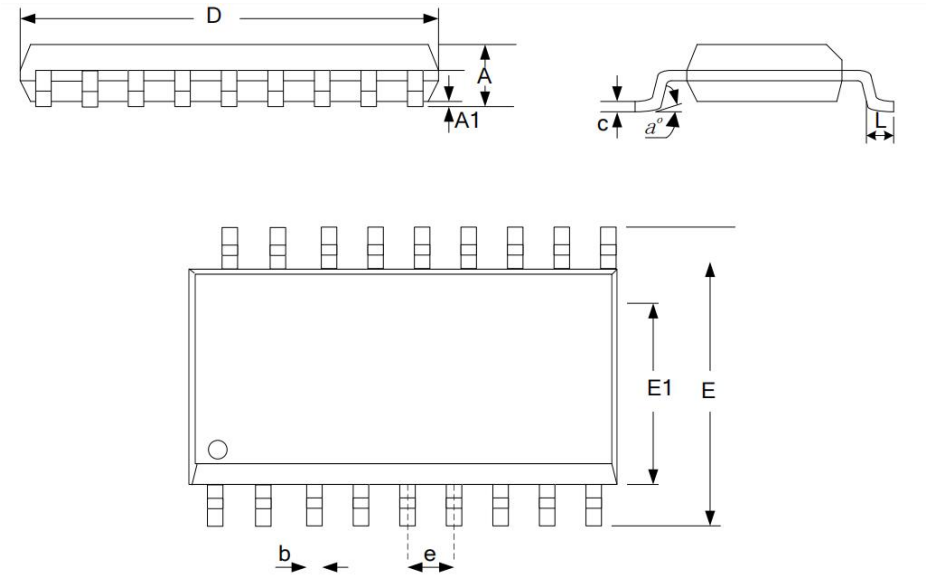

SYMBOL	DIMENSIONS IN MILLIMETERS			DIMENSIONS IN INCHES		
	MIN	NOM	MAX	MIN	NOM	MAX
A	-	-	2.65	-	-	0.104
A1	0.10	-	0.30	0.004	-	0.012
b	0.35	-	0.48	0.014	-	0.019
D	11.25	11.45	11.76	0.443	0.451	0.463
E	10.10	10.30	10.64	0.398	0.406	0.419
E1	7.30	7.50	7.70	0.287	0.295	0.303
e	1.27 Bsc.			0.05 Bsc.		
L	0.50	-	1.00	0.020	-	0.039
a°	0°	-	8°	0°	-	8°
C	0.19	-	0.29	0.007	-	0.011

DISCLAIMER

AFSEMI RESERVES THE RIGHT TO MAKE CHANGES WITHOUT FURTHER NOTICE TO ANY PRODUCTS HEREIN TO IMPROVE RELIABILITY, FUNCTION OR DESIGN. AFSEMI DOES NOT ASSUME ANY LIABILITY ARISING OUT OF THE APPLICATION OR USE OF ANY PRODUCT OR CIRCUIT DESCRIBED HEREIN; NEITHER DOES IT CONVEY ANY LICIENCE UNDER ITS PATENT RIGHTS, NOR THE RIGHTS OF OTHERS.

The graphs provided in this document are statistical summaries based on a limited number of samples and are provided for informational purpose only. The performance characteristics listed in them are not tested or guaranteed. In some graphs, the data presented may be outside the specified operating range (e.g. outside specified power supply range) and therefore outside the warranted range.